LaKe: An Energy Efficient, Low Latency, Accelerated Key-Value Store

Yuta Tokusashi, Keio University, Japan (2nd year PhD student)
aom@sfc.wide.ad.jp
Supervisors: Hiroki Matsutani (Keio Univ.), Noa Zilberman (Univ. of Cambridge)
Research Area: In-Network Computing

LaKe: Key-Value Store (KVS) made better

- ★ Networked applications (e.g., KVS) are inefficient due to power hungry CPUs.
- ★ Applications' performance needs to scale, but is limited by power.
- ★ LaKe: Scalable in-network KVS using cache hierarchy.
- ★ Energy efficiency: x24 better than software KVS, x5.1 better than hardware KVS .

Datacenter for Networked Systems

Power Consumption

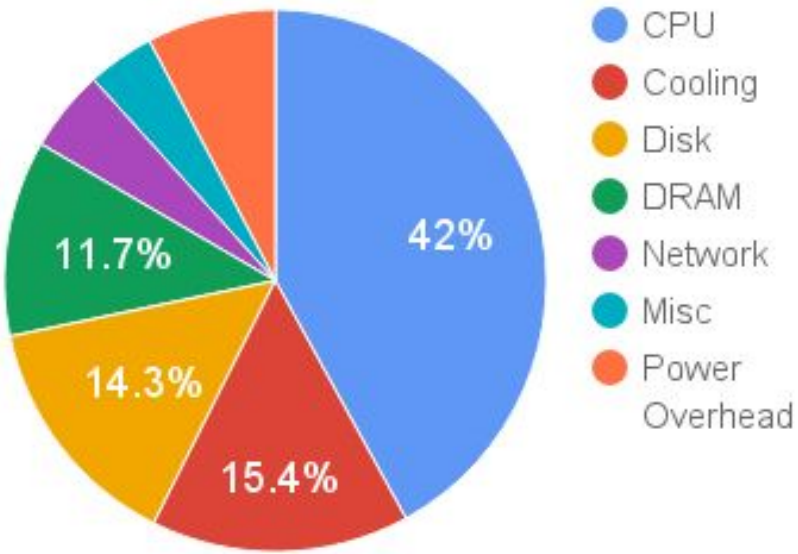

Gap between networking and Computing

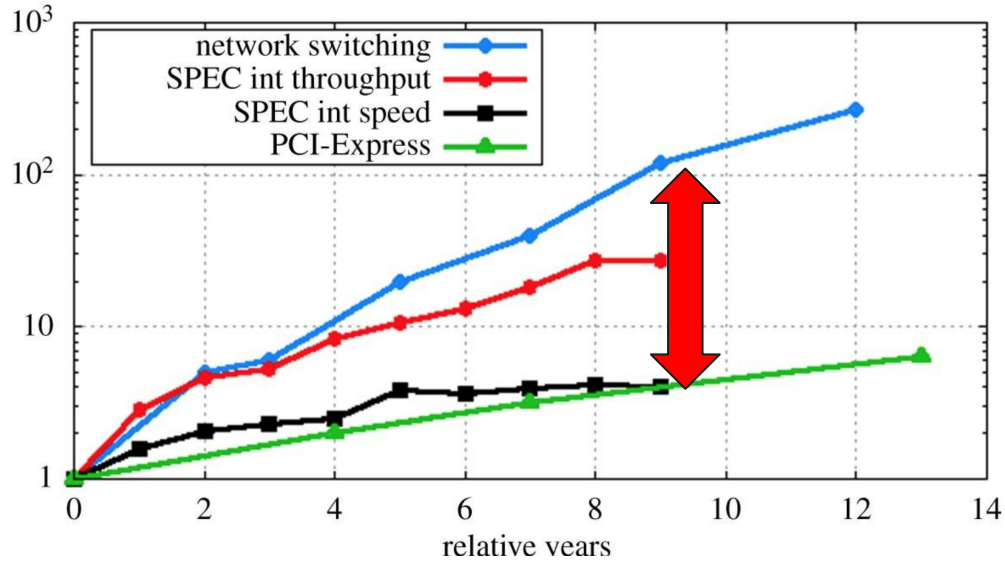

- CPU is power-hungry
- Computation growth is moderate, compared to networking.

Datacenter applications should be improved in terms of **Power** and **Performance**. **Power Efficiency is important!!!**

[RSTA'16] Noa Zilberman, et al. "From photons to big-data applications: terminating terabits". Royal Society Philosophical Transactions, March 2016.

Highly energy efficient KVS

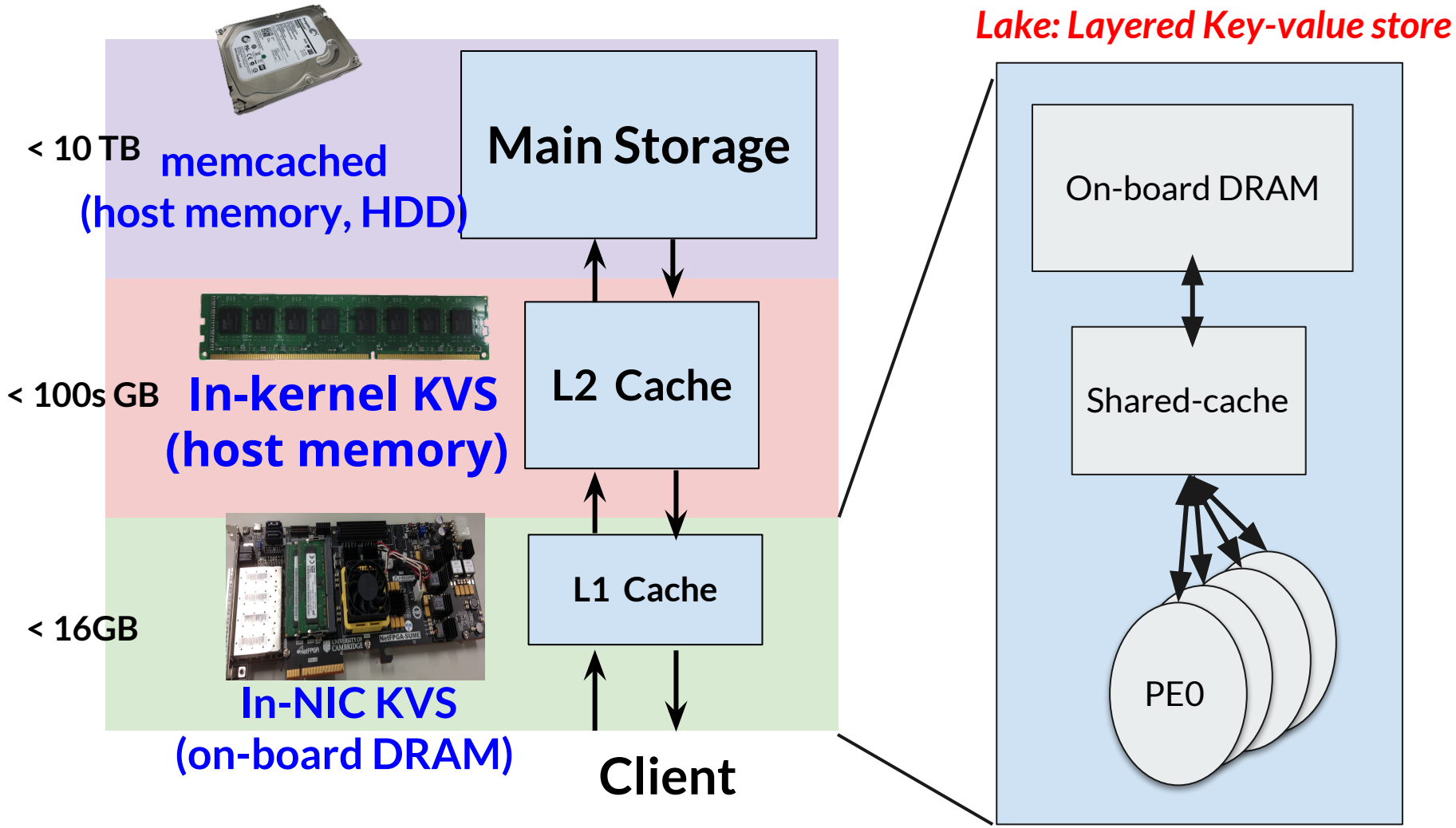

LaKe: Layered Key-value Store

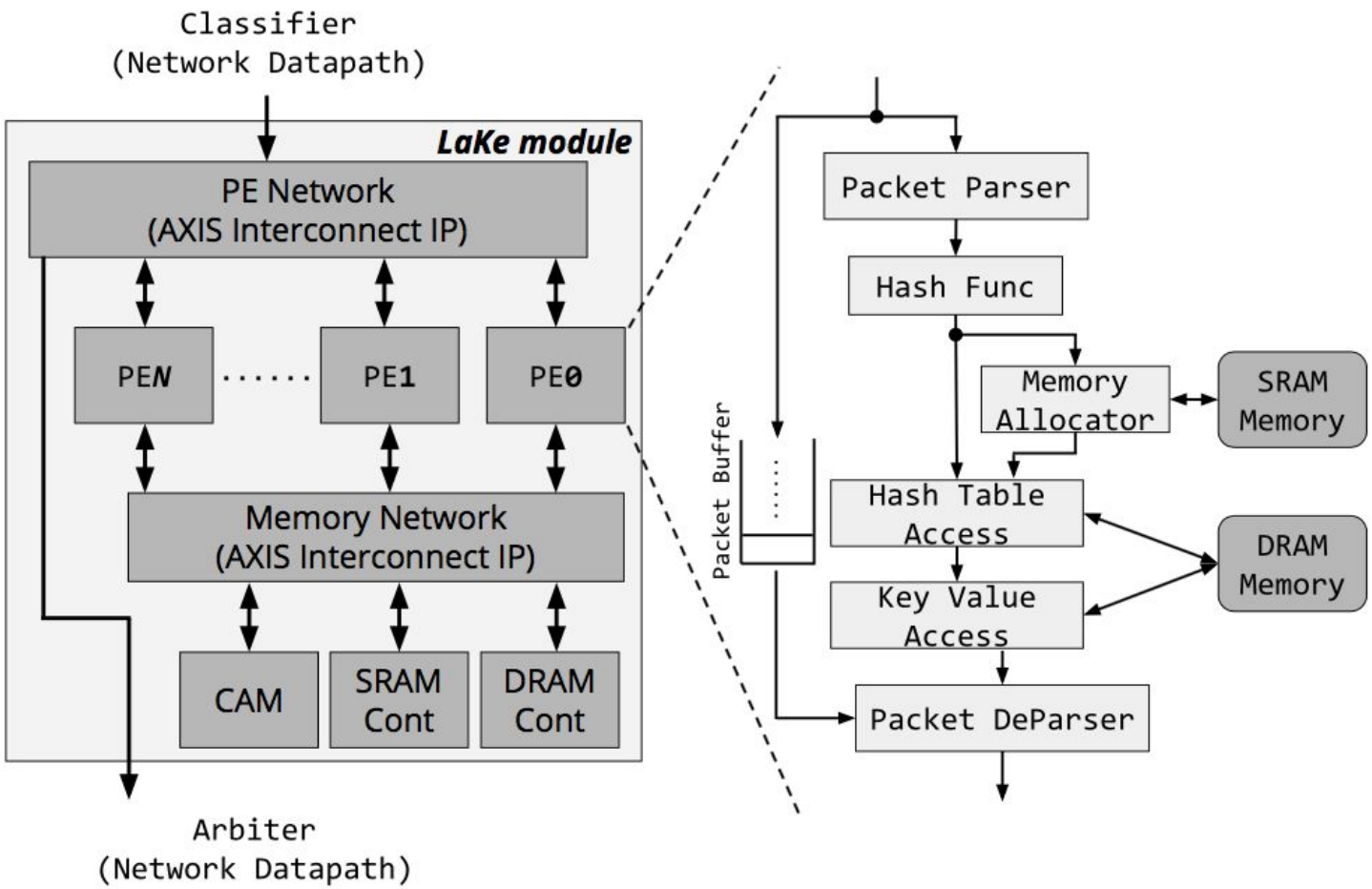

Comparison with related work

System	Latency [us]	Tput [Mqps]	Power Efficiency
Memcached (SW)	238.84	0.962	9.938 [kqps/W]
Emu (HW)	1.21	1.932	47.121
LaKe (my system)	1.16	13.120 (5PE totally)	**242.962**

i7-4770 + MellanoxNIC

i7-4770 + NetFPGA-SUME

x5.1

LaKe achieves **x5.1** better power efficiency, keeping latency equivalent to Emu.

Q & A

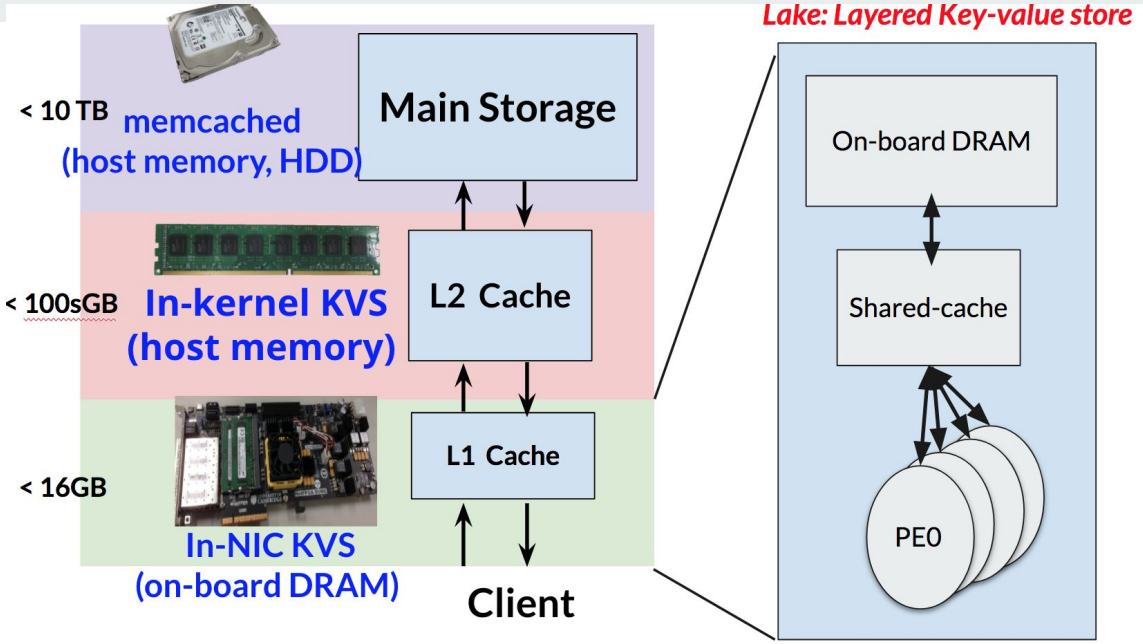

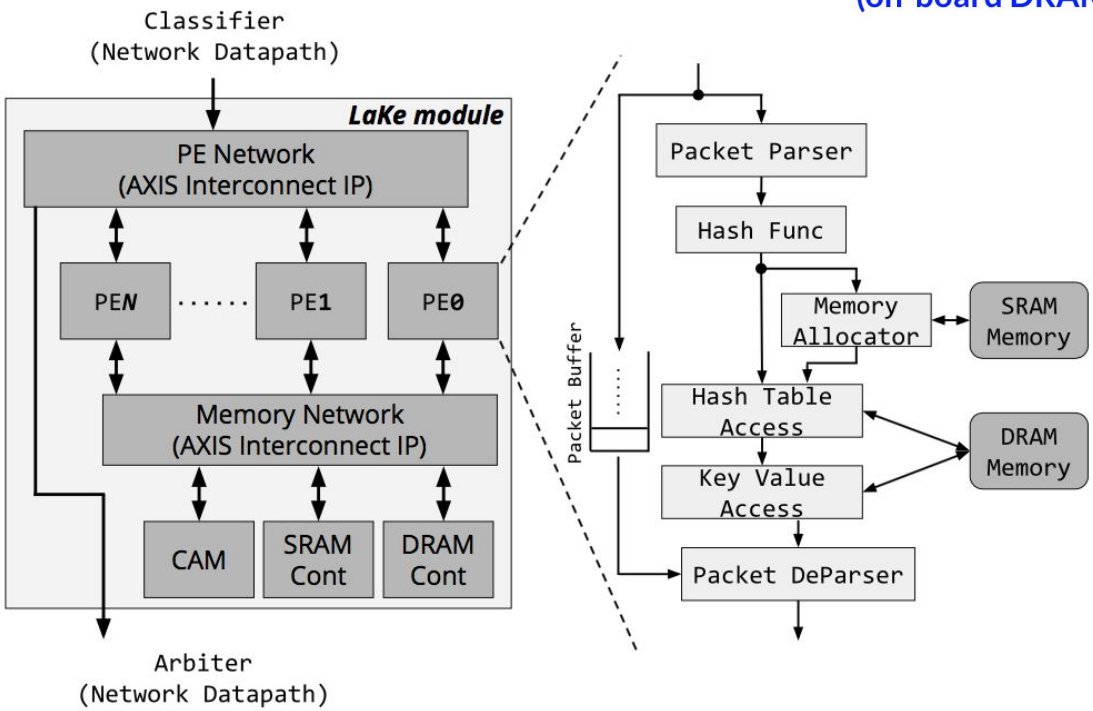

Thank you for your attention!!

Acknowledgement

This work is supported by JSPS Research Fellowship, The Leverhulme Trust and Isaac Newton Trust.